2.Control elements of the back panel

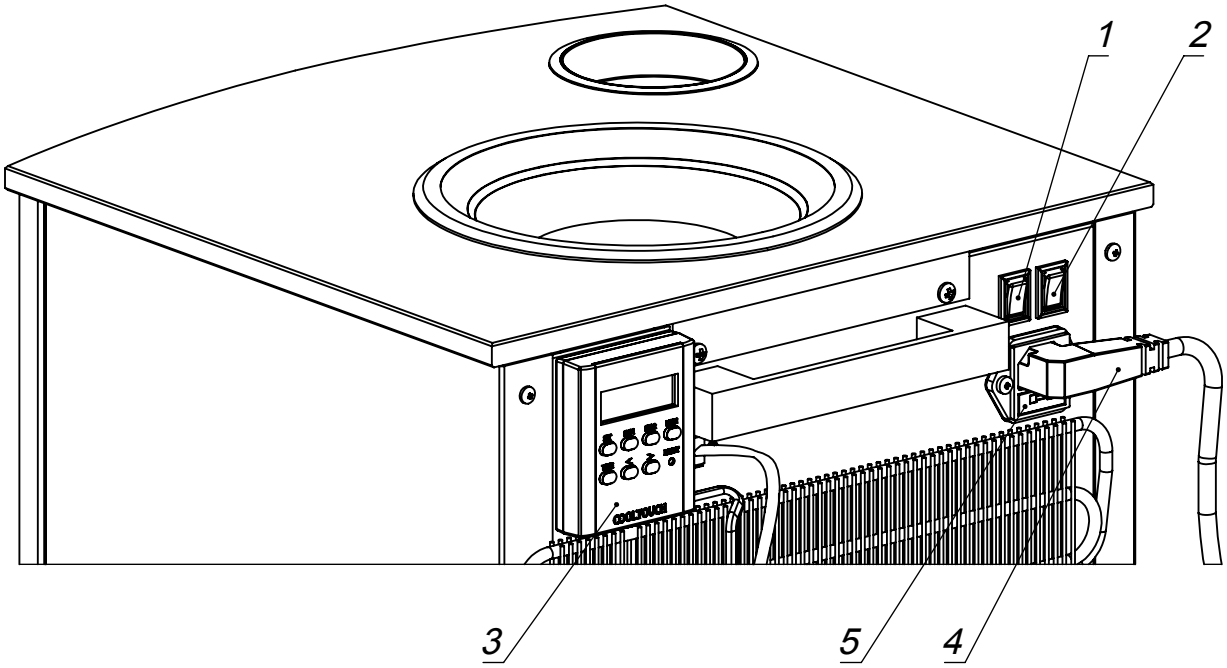

Nr.	DESCRIPTION
1	Switch HOT ON/OFF
2	Switch POWER ON/OFF
3	Console
4	Power plug
5	Fuse